ПРОТЕПЛО
теплоснабжение • водоснабжение • пожаротушение

+7 (800) 777-20-97
zakaz@proteplo.org
proteplo.org

Рекомендация перед выбором станции пожаротушения

Грамотный подбор

Лист данных показывает параметры модели. Надежность подтверждается проверкой условий объекта и требований проекта.



Что нужно проверить

Сверяются:



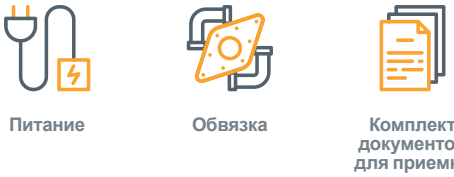

Почему это важно

Ошибки в подборе дают риски:



Перед закупкой отправьте параметры на проверку

После подтверждения подбора рассчитаем конфигурацию, цену, срок поставки и КП под ваш объект.

+7 (800) 777-20-97
zakaz@proteplo.org
proteplo.org

DATA SHEET

09/06/26 Page 1 / 4

DAB PUMPS S.p.A.
Via Marco Polo, 14 - 35035 Mestrino (PD), Italy
Tel. +39 049 5125000 - Fax +39 049 5125950
www.dabpumps.com

Receiver

Company
Reference
Address
Phone
Fax
E-mail

Item n° : 60179716 **Customer pos. no.:**

Model :
1 KVT6 03/8 11 3x400 50 IE3 EN12845

1 electric pump

Pump data

Pressure rating :	PN 16
Min. fluid temperature :	0 °C
Max. fluid temperature :	40 °C
Max. Ambient temperature :	40 °C

Requested data

Flow :	
Head :	
Fluid :	Water
Fluid Temperature :	20 °C
Density :	998,3 kg/m³
Kinematic viscosity :	1,005 mm²/s
Vapor pressure :	0,00234 MPa

Hydraulic data (duty point)

Flow :
Head :

Motor data main pump:

Nominal power P2 :	11 kW
Rated speed :	2.930 1/min
Rated voltage :	400 V
Rated current (subject to change) :	19,4 A

Motor data jockey pump:

Nominal power P2 :	kW
Rated voltage :	
Rated current (subject to change) :	

Materials

Pump body	Cast iron
Albero linea d'asse	Steel
Impeller	Cast iron
Pump shaft	Steel
Screws	Steel
Tubo aspirazione	Steel
Valvola di fondo	Cast iron
Sugheruola	Galvanized steel

Dimensions in mm

A	1.227	H1	1.590		
A max	1.466	H2	1.141		
A2	448	L	500		
B	595	P	1.230		
B max	595	S	Ø 140		
C	140	T	180		
DNM	80				
H	1.416				

Weight : 0 kg

Curve tolerance according to ISO 9906

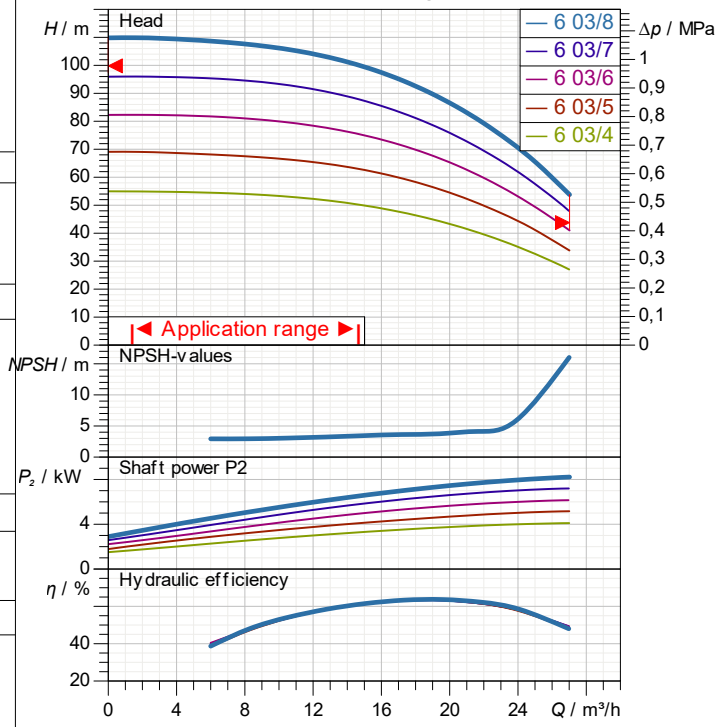

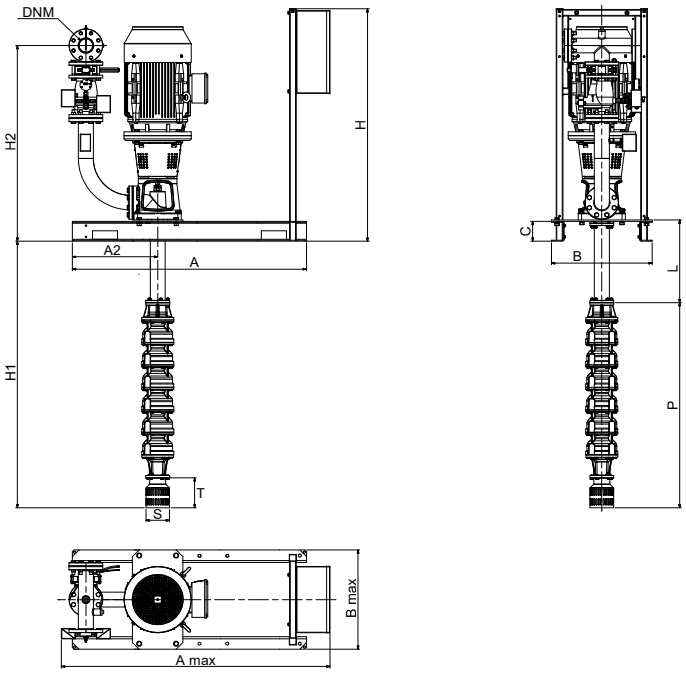

Pump connection

Submersible pump diameter : 6"
Discharge side : DN 80 / PN 16

The jockeypump and the related control panel (if present) can be installed in other positions

DAB PUMPS reserves the right to make modifications without notice

PERFORMANCE CURVES

09/06/26 Page 2 / 4

DAB PUMPS S.p.A.
Via Marco Polo, 14 - 35035 Mestrino (PD), Italy
Tel. +39 049 5125000 - Fax +39 049 5125950
www.dabpumps.com

Receiver

Company
Reference
Address
Phone
Fax
E-mail

1 KVT6 03/8 11 3x400 50 IE3 EN12845

Curve tolerance according to ISO 9906

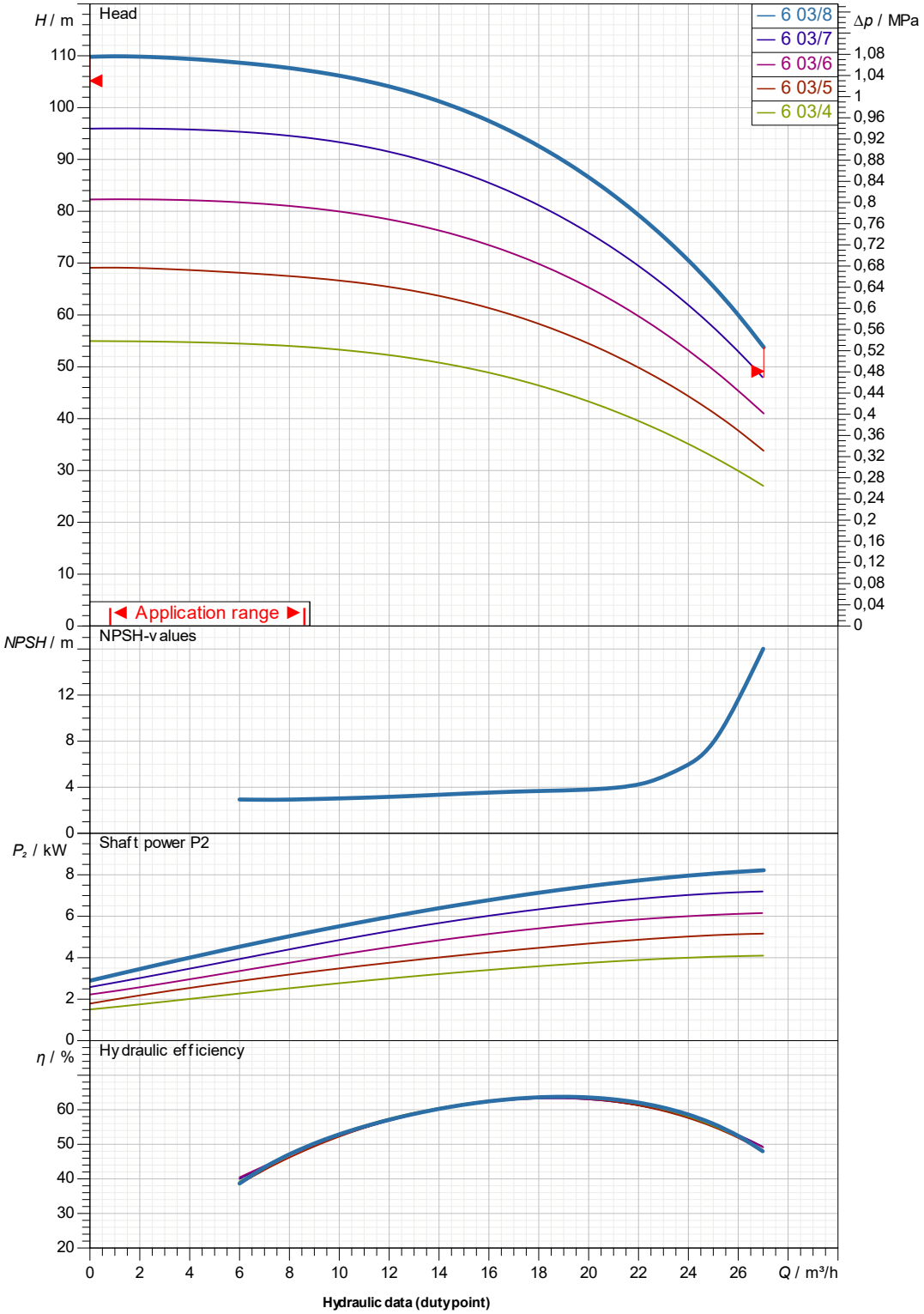

Hydraulic data (duty point)

Suction side :	Discharge side :	Flow :	Head :	Rated speed :
6"	DN 80			2.930 1/min
--	PN 16			

MAIN_PROJECT_TITLE	BUSINESS_PROCESS_ID	OWNER_	ISSUE_DATE
			09/06/26

DAB PUMPS reserves the right to make modifications without notice

DAB PUMPS S.p.A.
Via Marco Polo, 14 - 35035 Mestrino (PD), Italy
Tel. +39 049 5125000 - Fax +39 049 5125950
www.dabpumps.com

Receiver

Company
Reference
Address
Phone
Fax
E-mail

1 KVT6 03/8 11 3x400 50 IE3 EN12845

1 Elettropompa

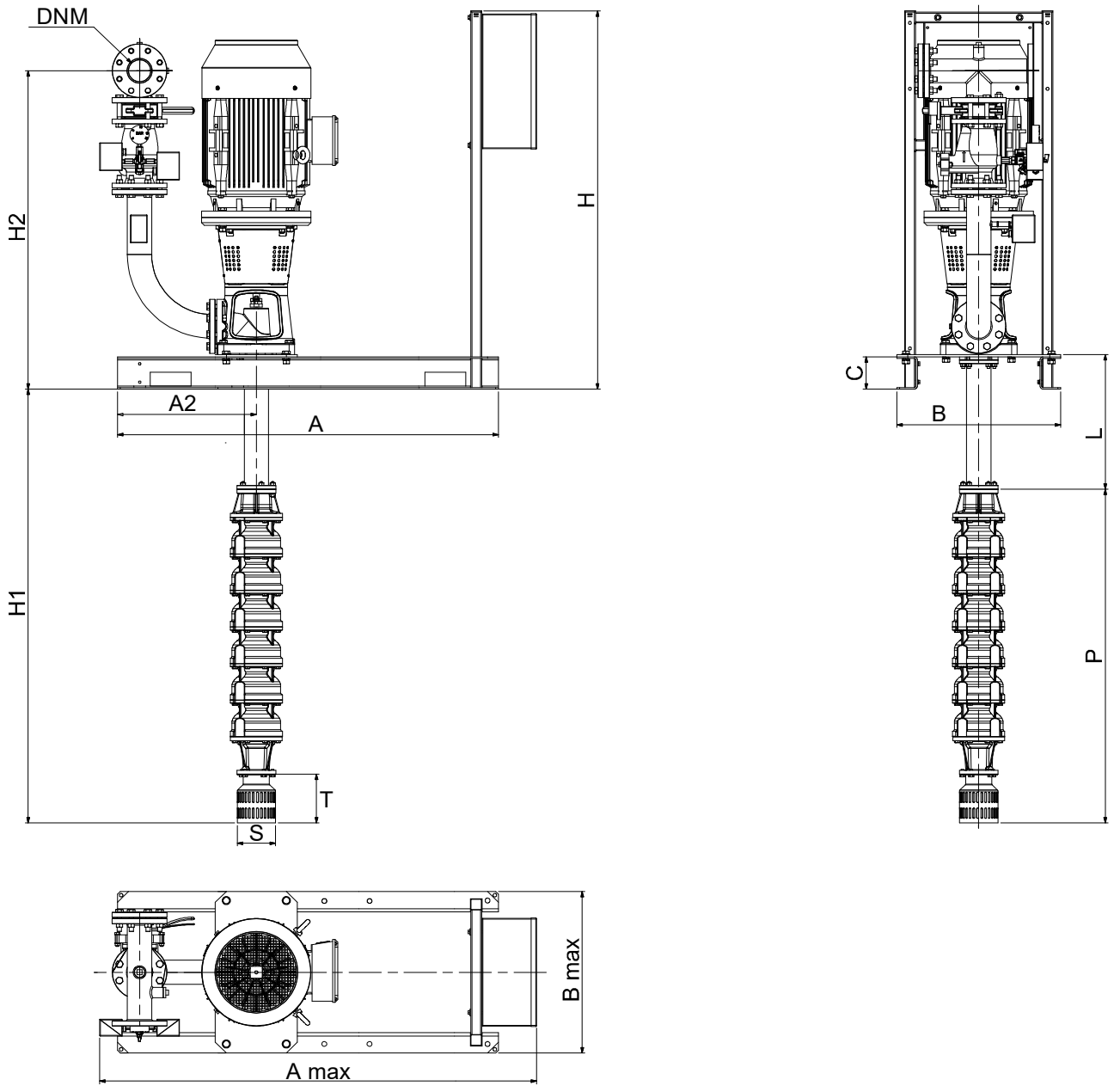

Dimensions in mm							Pump connection
1	A	1.227	S	Ø 140			
2	A max	1.466	T	180			Submersible pump diameter
3	A2	448					6"
4	B	595					
5	B max	595					
6	C	140					
7	DNM	80					Discharge
8	H	1.416					DN 80
9	H1	1.590					PN 16
10	H2	1.141					
11	L	500					
12	P	1.230					

MAIN_PROJECT_TITLE	BUSINESS_PROCESS_ID	OWNER_	ISSUE_DATE
			09/06/26

DAB PUMPS reserves the right to make modifications without notice

DAB PUMPS S.p.A.
Via Marco Polo, 14 - 35035 Mestrino (PD), Italy
Tel. +39 049 5125000 - Fax +39 049 5125950
www.dabpumps.com

Receiver

Company
Reference
Address
Phone
Fax
E-mail

1 KVT6 03/8 11 3x400 50 IE3 EN12845

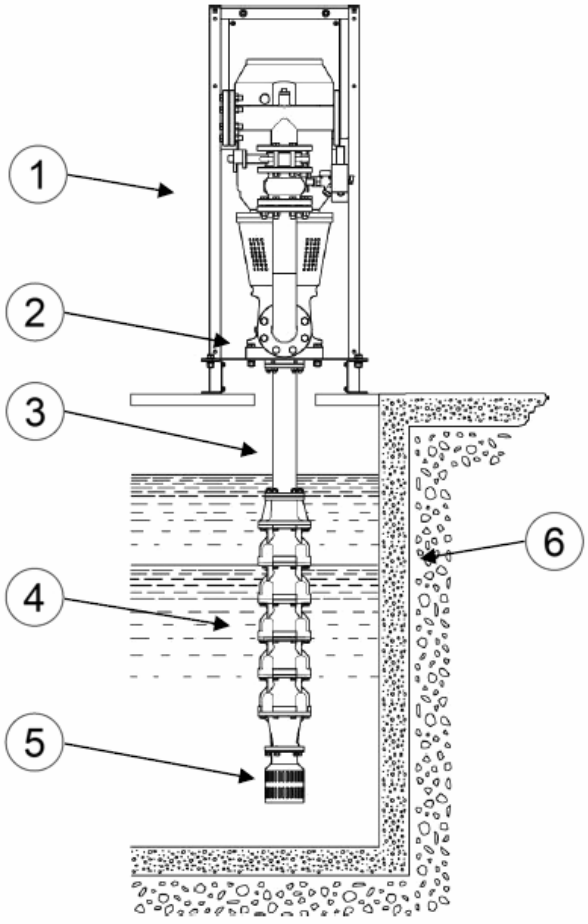

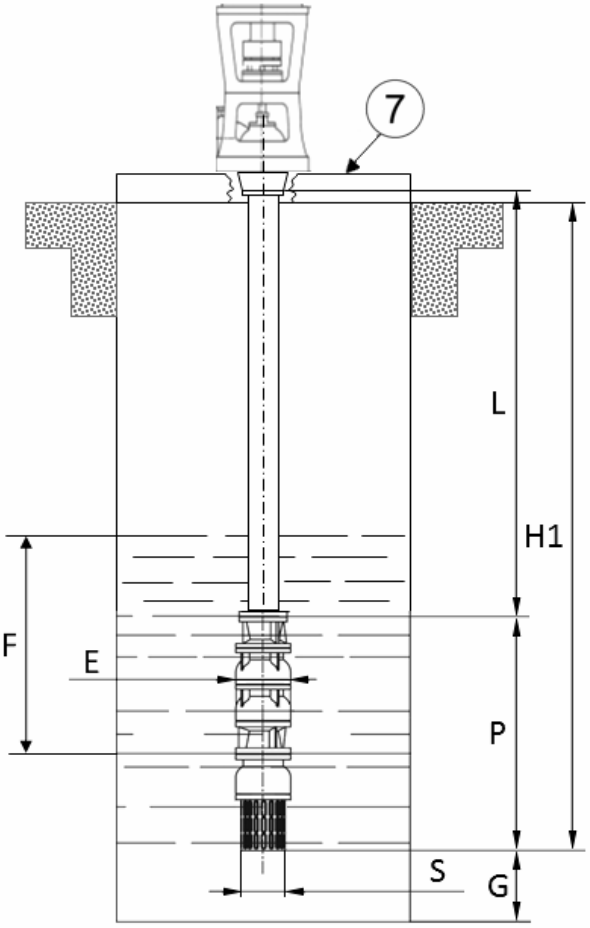

F (mm)	E (mm)	S (mm)	G (mm)
355	142	140	71

1: DRIVE HEAD
2: DISCHARGE BASE
3: LINESHAFT SECTION OF VARIABLE LENGTH
4: PUMP BODY
5: STRAINER / FILTER
6: TANK
7: BASE OF THE FIRE-FIGHTING SET

STRAINER / FILTER: included
Anti-vortex plate: separate accessory
Foot valve: separate accessory

REGARDING P, H1, L MEASUREMENTS PLEASE REFER TO PREVIOUS SHEET "DIMENSIONAL DRAWING"
F: Minimum positive suction head, is the operating limit of the pump under which the suction of the pump is not guaranteed.
To have the calculated value F please refer to the following method:
F= NPSHr (on duty point) + suction load losses (foot valve) -10,33 (atmospheric pressure)
It is always suggested to use anti-vortex breaking plates, which allow to reduce the F-height above the above-mentioned plate.

DAB PUMPS reserves the right to make modifications without notice